Your Engineering Partner...

ASPT11
Industrial Pressure Transducer series

The ASPT11 Industrial Pressure Transducer series is designed for demanding industrial applications. The pressure of the measured medium directly acts on the SS316L diaphragm of the sensor, causing the diaphragm to produce a micro displacement proportional to the pressure of the medium, changing the resistance value of the sensor, and detecting it with a Wheatstone circuit. This change, and convert and output a standard measurement signal corresponding to this pressure. The ASIC electronics offer analog and digital output signals with wide range of options for electrical and process connections



Major features

- Gauge, Absolute and Vacuum pressure measurement
- Pressures from vacuum up to 1000 Bar
- Process Temperature from -40 to 125 Deg C
- Default integral snubber for pressure ranges starting from 25 Bar
- SS316L diaphragm structure
- Strong anti-interference, good long-term stability
- Anti-vibration, shock resistance
- Zero, full span adjustable option

Applications

- Engine fuel pressure measurement
- Refrigeration and Air compressors
- Hydraulic systems
- Water pressure measurement
- Autoclaves & ETO Sterilizers
- Liquid & Gas pressure measurement
- Circuit Breakers

Technical Parameters

Pressure Range : Upto 1000 Bar

Performance

Accuracy*	: $\leq \pm$ 0.5% FS ($\leq \pm$0.25%BFSL)
Stability (1 year)	: $\leq \pm$ 0.25% of FS
Insulation Resistance	: > 100 MΩ/500VDC (200 MΩ/250VDC)
Over Range Protection	: 300% F.S. ($\leq$70 kPa) \| 200% F.S. ($\leq$16MPa) \| 150% F.S. ($\leq$100 MPa)
Temperature Drift	: $\leq \pm$ 1.5% F.S. (-20 to 85 ^{0}C)
Response Time	: $\leq$ 1ms (upto 90% F.S.)
Reverse Polarity Protection	: Yes

*Accuracy includes non-linearity, hysteresis & non-repeatability

Thermal

Temperature

Ambient Temp.	: -20 ~ 80^{0}C
Medium Temp.	: -40 ~ 125^{0}C
Storage Temp.	: -40 ~ 120^{0}C

Thermal Limits

Compensated Range	: 0 ~ 70^{0}C
TC Zero	: $\leq \pm$ 1.5% FS
TC Span	: $\leq \pm$ 1.5% FS

Environmental

EMI/RFI Protection	: Immunity: IEC 61000-6-2, Radiation: IEC 61000-6-3
IP Rating*	: IP65 minimum
Vibration	: Sine Curve: 20g (25Hz~2000 Hz); IEC 60068-2-6
Random	: 7.5g (5Hz~1kHz); IEC 60068-2--64
Shock	: 200g(1ms); IEC 60068-2-27
Free Falling Body	: 1m; IEC 60068-2-32
Surge	: IEC 6100-4-5-3 level
Static Electricity	: IEC 61000-4-2 4 level
Net Weight	: 150-180gms| For cooling fins units 220-360gms

Electrical

Output	4~20 mA	0~5V	1~5V	0~10V	1~10V0.	5~4.5VR/M
Supply	12..30VDC	12…30VDC	12…30VDC	12…30VDC	12…30VDC	5VDC

Dimension

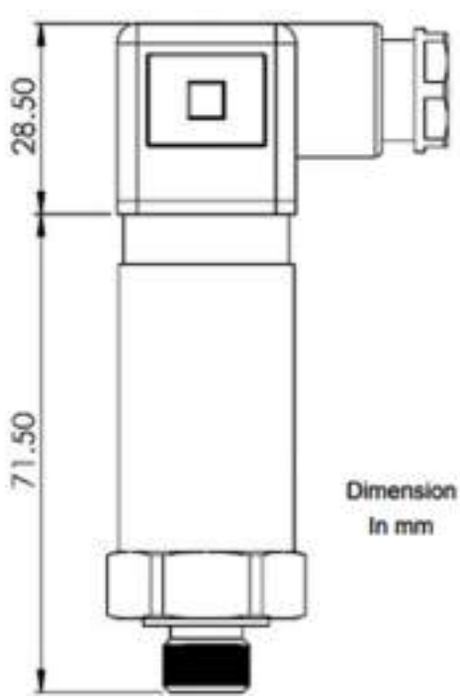

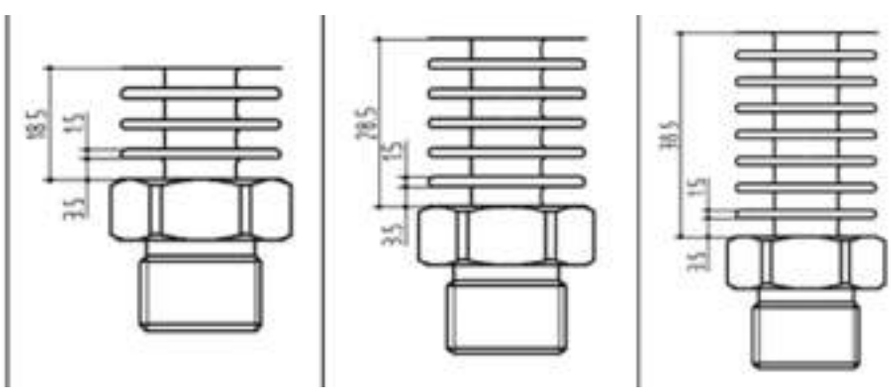

Wiring Guide

DIN 43650, FORM A

Output	Pin 1	Pin 2	Pin 3	Pin 4
4…20 mA (2-wire)	V+	V-	NC	NC
Voltage (3-wire)	V+	Ground	Signal	NC
Voltage (4-wire)	+Signal	Ground	+V	-Signal

Ordering Guide

ASPT 11i -25-B-G-1-2-1-L-S

Model Family

- i = Current Output Industrial Pressure Transmitter
- u = Voltage Output Industrial Pressure Transmitter
- d = Digital Output Industrial Pressure Transmitter
- t = High Temperature Industrial Pressure Transmitter

Pressure Range

- Insert Pressure Code
- Consult factory for pressure above 3750 psi

Pressure Unit

- P= Psi
- B= Bar
- K= Kg/Cm2
- m= Millibar
- W= Inches of H2O

Pressure Reference

- A= Absolute
- C= Compound (Sealed Gauge)
- G= Gauge
- S= Sealed Gauge

Output

- 1= 4-20 mA
- 2= 1-5 V
- 3= 0-5V
- 4= 0.5-4.5V
- 5= 0-10V
- 6= 1-10V
- 7= RS485
- 8= I2C

Special Options

- S = Snubber
- D = Head Mount Display
- C1= Cooling Fin for medium temperature $\leq$ 150 Deg C
- C2= Cooling Fin for medium temperature 150 Deg C upto $\leq$ 250 Deg C
- C3= Cooling Fin for medium temperature 250 Deg C upto $\leq$ 350 Deg C

Wetted Parts

- L= 316L SS

Process connection

- 1= G1/4"Male
- 2= G ½" Male
- 3= M20X1.5-6G
- 4= M14X1.5
- 5= ¼" NPT Male
- 6= ½" NPT Male
- 7= G 3/8
- 8= 7/16-20 UNF

Electrical

- 2= Big DIN
- 4= 1m cable

Due to continuous development of our products technical information's are subject to change.
Please ensure the compatibility between the measured medium and the contacting part of the product when placing an order.
ACT Sensors reserves the right to make any change in this datasheet without notice. The information provided is believed to be accurate and reliable as of this product sheet.
Contact factory for custom configurations not shown

ACT SENSORS PVT. LTD.
Your Engineering Partner...
GNP Galaxy, Unit No. 28, Ground Floor, Zone-4, Phase -2, Kansai, Ambernath Industrial Area, Kalyan- Badlapur Road, Ambernath(W) – 421 501
www.actsensor.in www.actsensor.net